RevNo	Revision note	Date	Signature	Checked

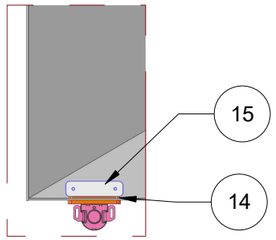

Detail A
OBSTRUCTING HARDWARE
HIDDEN FROM VIEW

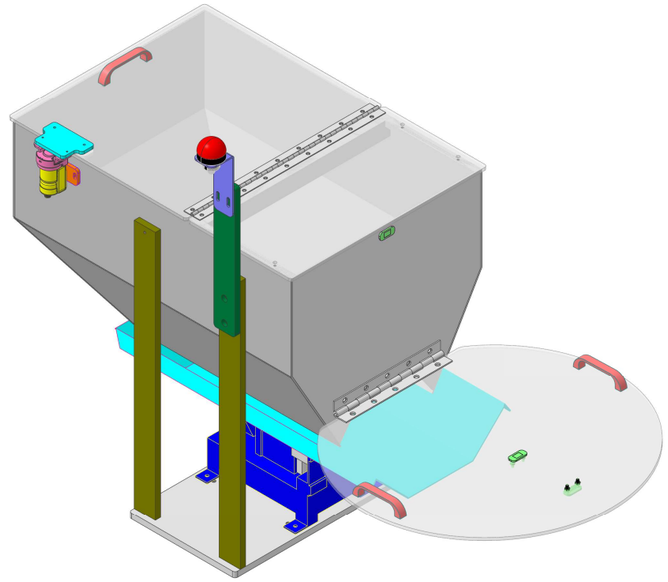

ITEM NUMBER	QTY	PART NUMBER	PART NAME	REV
1	1	FC-24-21740-HPC	Hinged PC Cover	A
2	1	FC-24-21740-FPC	Fixed PC Cover	A
3	1	FC-24-21740-BPC	Bowl PC Cover	A
4	1	FC-24-21740-5MMB	KEYENCE MS-MA5M Mount Bracket	A
5	3	1651A4	Threaded-Hole Rectangular Pull Handle	N/A
6	3	4096N223	Magnetic Latch	N/A
7	1	FC-24-21740-51MB	KEYENCE GS-M51P Mount Bracket	A
8	1	K50L2RGB7Q	BANNER K50 Programmable Indicator	N/A
9	1	GS-M51P	KEYENCE 500N Holding Force Clamp	N/A
10	1	FC-24-21740-LMA	Stack Light Mounting Arm	A
11	1	FC-24-21740-HDU	Drive Unit	N/A
12	4	FC-24-21740-HSS	Side Support	A
13	1	FC-24-21740-HBT	Bottom Tray	A
14	1	FC-24-21740-51MC	KEYENCE GS-M51P Mount Clamp	A
15	1	FC-24-21740-A5MC	GS-MA5 Mount Clamp	A
16	1	FC-24-21740-LMB	BANNER Light Mount Bracket	A
17	1	GS-MA5	KEYENCE Coding level Low Actuator for GS-M5 Series	N/A

HOPPER ASSEMBLY COMMON
FOR ALL FC-24-21740 FEEDERS

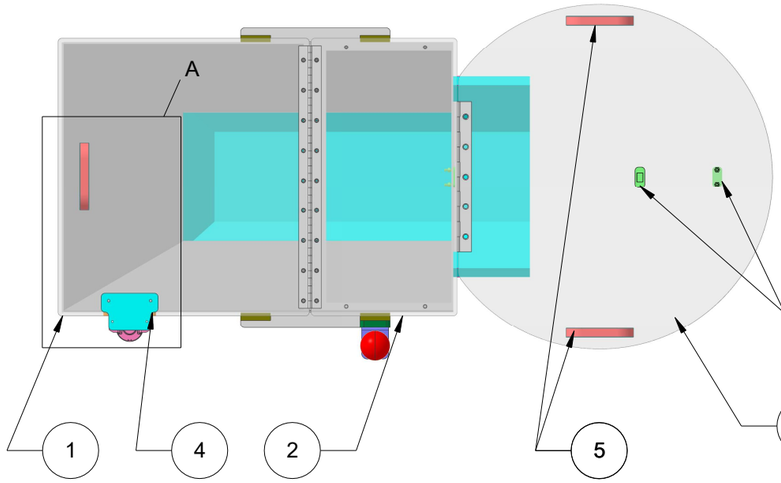

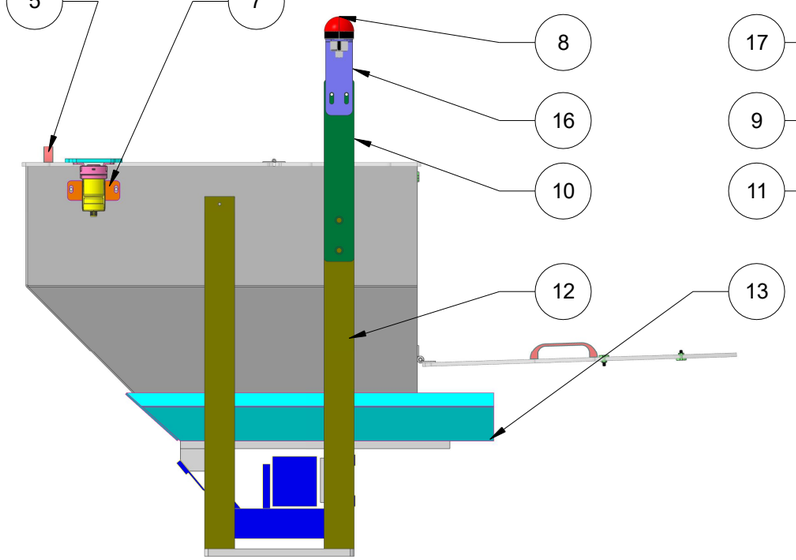

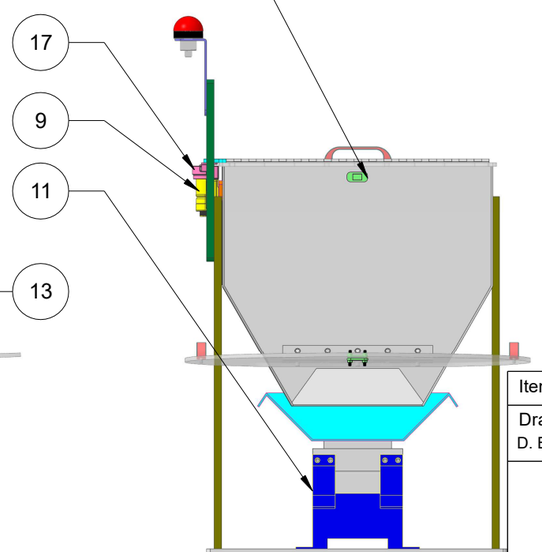

Itemref	Quantity	Title/Name, designation, material, dimension etc		Article No./Reference	
Drawn by D. BADER	Checked by	Approved by - date	File name	Date JUNE 30TH, 2025	Scale 1:1

FEEDING CONCEPTS, INC.
Automatic Parts Feeding Equipment
15235 Herriman Blvd.
Noblesville, IN 46060
(317) 773-2040

HOPPER ASSEMBLY

RHINO FC-24-21740-1:-16	Edition	Sheet 1 OF 1